VFA ELEKTRONİK

www.vfaelektronik.com

Coriolis Mass Flow Meter

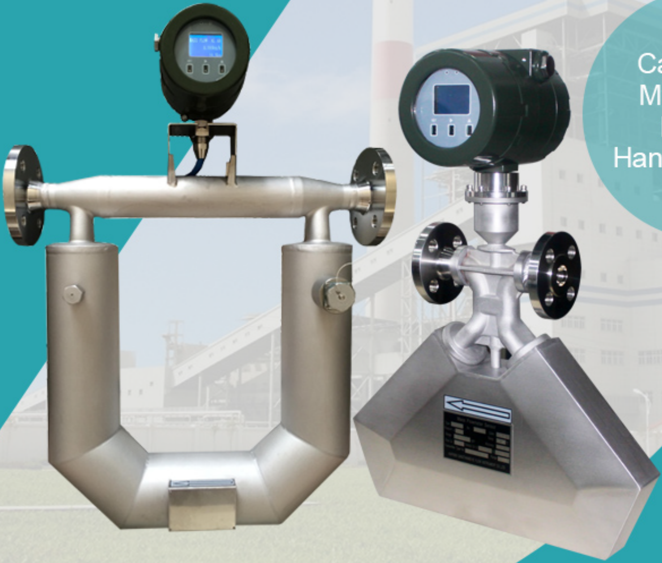

Capable of Measuring Difficult Handling Fluids

CE

Ex-proof

ISO

01 APPLICATION

Batch Control

Blending/Filling/Dosing

Custody Transfer

Wide Application

Widely used in the measurement of liquids, gases and slurries,
Even for below difficult handling fluids:

- Petroleum, such as crude oil, coal slurry, lubricant and other fuels.
- High viscosity materials, such as asphalt, heavy oil and grease;
- Suspended and solid particulate matter materials, such as cement slurry and lime slurry;
- Easy-to-solidified materials, such as asphalt
- Micro-flow measurements, such as fine chemical and pharmaceutical industries;

• CASES •

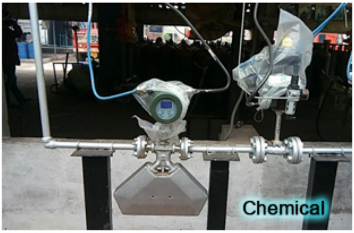

Chemical

Petroleum

On Boat

LPG Bottling

02 PRODUCT FEATURES

PRODUCT FEATURES

High Flow Accuracy:

Standard 0.2%, Optional 0.1%

Easy to Install

No Flow Conditioning
or Straight Pipe
Runs Required

Wide Medium Temperature Range

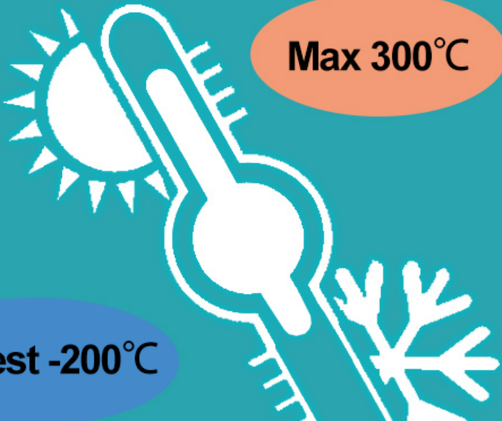

Max 300℃

Lowest -200℃

(For medium such as liquid nitrogen, oxgen and argon)

High Pressure Handling

Up to **35Mpa** in Oil Drilling Wells etc

Multiple Parameters Measured

Mass Flow

Density and Temperature

Volume Flow

Independent of density changes, ability to measure undefined or variable mixtures

No Routine Maintenance Required

Rugged Meters with No Moving Parts Results in Minimal Maintenance

03 PRODUCT DETAILS

01 SENSOR

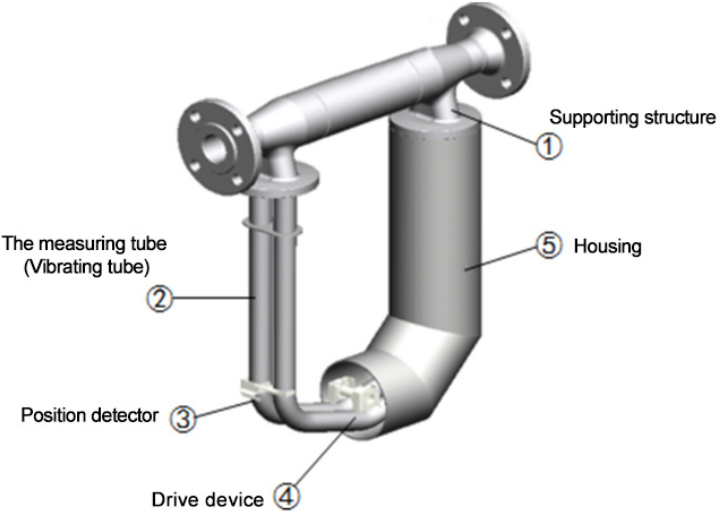

02

CONVERTER

Ex

IP67

MASS FLOW AL AH
0.000t/h
1.4t
SET

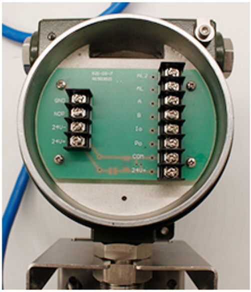

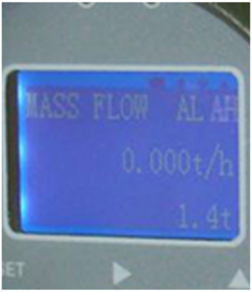

LCD DISPLAY

The big show window of LCD is easy to debug and observe

04 PARAMETER

SPECIFICATION

Specification

Flow Accuracy	±0.2% Optional ±0.1%
Diameter	DN3~DN200mm
Flow Repeatability	±0.1~0.2%
Density Measuring Range	0.3 ~ 3.000g/cm3
Density Accuracy	±0.002g/cm3
Temperature Measuring Range	-200~300℃ （Standard Model -50~200℃)
Temperature accuracy	+/-1℃
Output of current loop	4~20mA; Optional Signal of Flow Rate/Density/Temperature
Output of Frequency/Pulse	0~10000Hz ; Flow Signal(Open Collector)
Communication	RS485, MODBUS protocol
Power supply of transmitter	18~36VDC Power≤7W or 85~265VAC Power 10W
Protection Class	IP67
Material	Measuring tube SS316L Housing: SS304
Pressure Rating	4.0 Mpa (Standard Pressure)
Explosion-proof	Exd (ia) IIC T6Gb
Enviroment Specifications	
Ambient Temperature	-20℃～60℃
Enviroment Humidity	≤95% RH

FLOW RANGE

Specification	DN (mm)	Flow range(kg/h)	Zero Stability, kg/h			NW (kg)	GW (kg)
			0.2%	0.15%	0.1%		
QTCMF-003	3	0~96~120	0.018	0.012	0.012	8	19
QTCMF-006	6	0~540~660	0.099	0.066	0.066	12	22
QTCMF-008	8	0~960~1200	0.18	0.12	0.12	12	23
QTCMF-010	10	0~1500~1800	0.27	0.18	0.18	11	24
QTCMF-015	15	0~3000~4200	0.63	0.42	0.42	12	25
QTCMF-020	20	0~6000~7800	1.17	0.78	0.78	20	34
QTCMF-025	25	0~10200~13500	2.025	1.35	1.35	21	35
QTCMF-032	32	0~18 000~24 000	3.6	2.4	2.4	27	45
QTCMF-040	40	0~30 000~36 000	5.4	3.6	3.6	35	55
QTCMF-050	50	0~48 000~60 000	9	6	6	40	60
QTCMF-080	80	0~120 000~160 000	24	16	16	90	150
QTCMF-100	100	0~222 000~270 000	40.5	27	27	170	245
QTCMF-150	150	0~480 000~600 000	90	60	60	255	350

Model Selection

QTCMF		XXX	X	X	X	X	X	X	X	X	X
Caliber (mm)	DN3-DN200 Reference Code, please check caliber code table 1										
Nominal Pressure	0.6Mpa		1								
	1.0Mpa		2								
	1.6Mpa		3								
	2.5Mpa		4								
	4.0Mpa		5								
	Others		6								
Connection	Flange			1							
	Tri-clamp(Sanitary)			2							
	Thread			3							
	Others			4							
Accuracy	0.1				1						
	0.2				2						
Temperature	- 200℃～200℃					1					
	-50℃～200℃					2					
	-50℃～300℃					3					
Structure Type	Compact/Integral						1				
	Remote						2				
Power Supply	AC220V							A			
	DC24V							D			
Output Signal	4-20mA/Pulse,RS485								A		
	4-20mA,HART								B		
	Others								C		
Ex-proof	Without Ex-proof									0	
	With Ex-proof									1	
Process Connection	DIN PN10										1
	DIN PN16										2
	DIN PN25										3
	DIN PN40										4
	ANSI 150#										A
	ANSI 300#										B
	ANSI 600#										C
	JIS 10K										D
	JIS 20K										E
	JIS 40K										F
	Others										G

Table 1	Caliber	3	6	8	10	15	20	25	32	40	50	65	80	100	125	150	200
Caliber Code Table	Code	003	006	008	100	150	200	250	320	400	500	650	800	101	125	151	201

DIMENSION

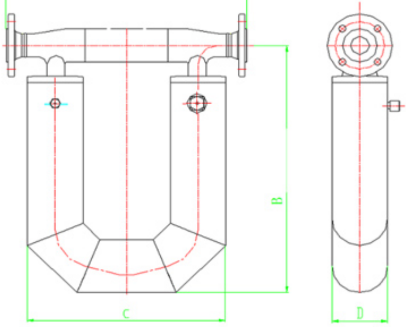

Remote Type Sensor

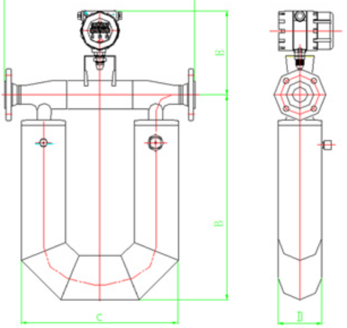

Compact Type

Model	A	B	C	D	E	N W(only sensor)
	mm	mm	mm	mm	mm	kg
HTCMF-010	200	350	350	58	225	7.2
HTCMF-015	250	453	500	89	228	7.5
HTCMF-020	250	448	500	89	233	17
HTCMF-025	550	500	445	108	238	17.5
HTCMF-032	550	500	445	108	240	24
HTCMF-040	600	760	500	140	245	32
HTCMF-050	600	760	500	140	253	36
HTCMF-080	850	1050	780	220	315	87.5
HTCMF-100	1050	1085	840	295	358	165
HTCMF-150	1200	1200	950	320	340	252
HTCMF-200	1200	1193	1000	400	358	350

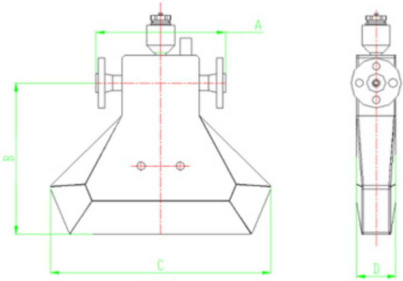

QTCMF-003 / 006 / 008

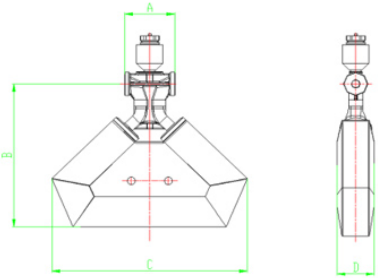

QTCMF-010 / 015

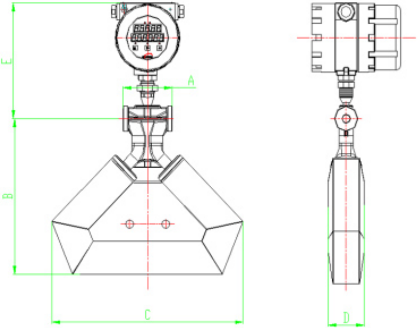

QTCMF010 / 015 Compact Type

Model	A	B	C	D	E	NW
	mm	mm	mm	mm	mm	kg
HTCMF-003	178	176	250	54	244	4.8
HTCMF-006	232	263	360	70.5	287	8.1
HTCMF-008	232	275	395	70.5	290	8.2
HTCMF-010	95	283	370	70.5	242	6.5
HTCMF-015	95	302	405	70.5	242	6.5

05 INSTALLATION

To ensure the reliability of measuring, the installation should consider below factors:

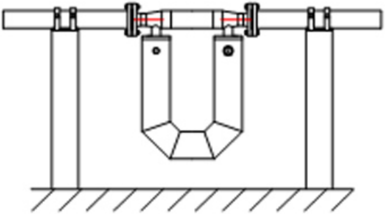

Figure 3-1

The meter should be installed downward when measuring liquid flow (Figure3-1), so that air
cannot get trapped inside the tubes.

The meter should be installed upward when measuring gas flow (Figure3-2), so that liquid cannot get trapped inside the tubes.

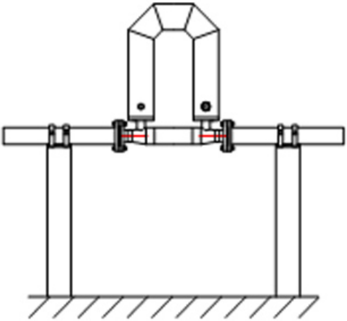

Figure 3-2

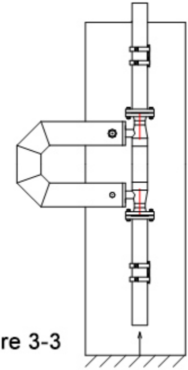

Figure 3-3

The meter should be installed sideward when the medium is turbid liquid (Figure3-3) to avoid particulate matter accumulated in the measuring tube. The flow direction of medium goes from the bottom up through the sensor.

06

CALIBRATION

Flow Standard Devi
量标准装置

Strict Calibration for Every Meter
Before Shipping

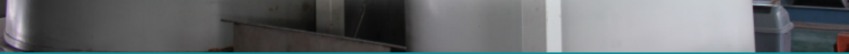

CERTIFICATE

Professional production, ensure high quality

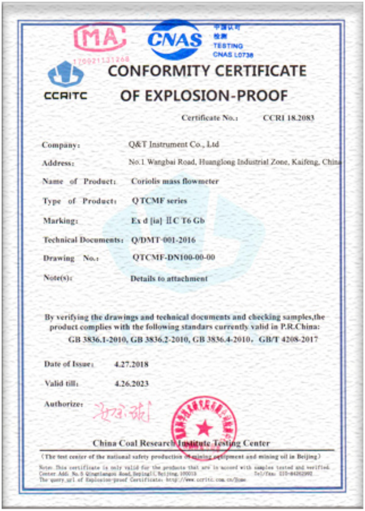

CMA
170021131268

CNAS
中国认可
检测
TESTING
CNAS L0738

CCRITC

CONFORMITY CERTIFICATE OF EXPLOSION-PROOF

Certificate No.: CCRI 18.2083

Company: Q&T Instrument Co., Ltd
Address: No.1 Wangbai Road, Huanglong Industrial Zone, Kaifeng, China
Name of Product: Coriolis mass flowmeter
Type of Product: QTCMF series
Marking: Ex d [ia] ⅡC T6 Gb
Technical Documents: Q/DMT-001-2016
Drawing No.: QTCMF-DN100-00-00
Note(s): Details to attachment

By verifying the drawings and technical documents and checking samples,the product complies with the following standars currently valid in P.R.China:
GB 3836.1-2010, GB 3836.2-2010, GB 3836.4-2010, GB/T 4208-2017

Date of Issue: 4.27.2018
Valid till: 4.26.2023
Authorize:

China Coal Research Institute Testing Center

(The test center of the national safety production of mining equipment and mining oil in Beijing)

Note: This certificate is only valid for the products that are in accord with samples tested and verified.
Center Add: No.5 [illegible] Road, [illegible] Beijing, 100013 Tel/Fax: [illegible]
The query url of Explosion-proof Certificate: http://www.ccritc.com.cn/Home

Coriolis Mass Flow Meter Ex-proof

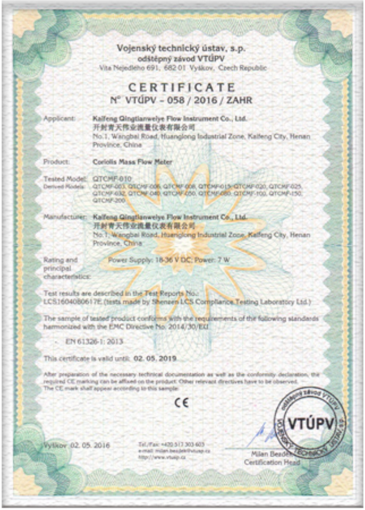

Vojenský technický ústav, s.p.
odštěpný závod VTÚPV
Víta Nejedlého 691, 682 01 Vyškov, Czech Republic

CERTIFICATE
N° VTÚPV - 058 / 2016 / ZAHR

Applicant: Kaifeng Qingtianweiye Flow Instrument Co., Ltd.
开封青天伟业流量仪表有限公司
No.1, Wangbai Road, Huanglong Industrial Zone, Kaifeng City, Henan Province, China

Product: Coriolis Mass Flow Meter

Tested Model: QTCMF-010
Derived Models: QTCMF-003, QTCMF-006, QTCMF-008, QTCMF-015, QTCMF-020, QTCMF-025, QTCMF-032, QTCMF-040, QTCMF-050, QTCMF-080, QTCMF-100, QTCMF-150, QTCMF-200

Manufacturer: Kaifeng Qingtianweiye Flow Instrument Co., Ltd.
开封青天伟业流量仪表有限公司
No.1, Wangbai Road, Huanglong Industrial Zone, Kaifeng City, Henan Province, China

Rating and principal characteristics: Power Supply: 18-36 V DC; Power: 7 W

Test results are described in the Test Reports No.:
LCS1604080617E (tests made by Shenzen LCS Compliance Testing Laboratory Ltd.)

The sample of tested product conforms with the requirements of the following standards harmonized with the EMC Directive No. 2014/30/EU:

- EN 61326-1: 2013

This certificate is valid until: **02. 05. 2019**

After preparation of the necessary technical documentation as well as the conformity declaration, the required CE marking can be affixed on the product. Other relevant directives have to be observed.
The CE mark shall appear according to this sample:

CE

Vyškov 02. 05. 2016

Tel./Fax: +420 517 303 603
e-mail: milan.beszdek@vtusp.cz
http://www.vtusp.cz

VTÚPV

Milan Beszdek
Certification Head

Coriolis Mass Flow Meter CE

德意志联邦共和国
商标注册证书
营业执照
企业法人营业执照

Enterprise Certificates

IEP
CERTIFICATE OF REGISTRAT
CERTIFICATE
CONFORMITY CERTIFICATE OF EXPLOSION-PROOF

More than 100 patents

Packaging

From wrapping to packing, we take care of every process to ensure safe delivery.

Enter the finished product warehouse and wait for transportation

Trade Show

Rich experiences in exhibition

Q&T
PHILEMON
STCK

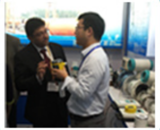

www.vfaelektronik.com

Fevzi Çakmak Mah. Aslım Cad. Atiker 1 San. Sit. o: 40/Z Karaay / Konya
Tel : (332) 235 18 88 E - Posta : info@vfaelektronik.com

VFA ELEKTRONİK